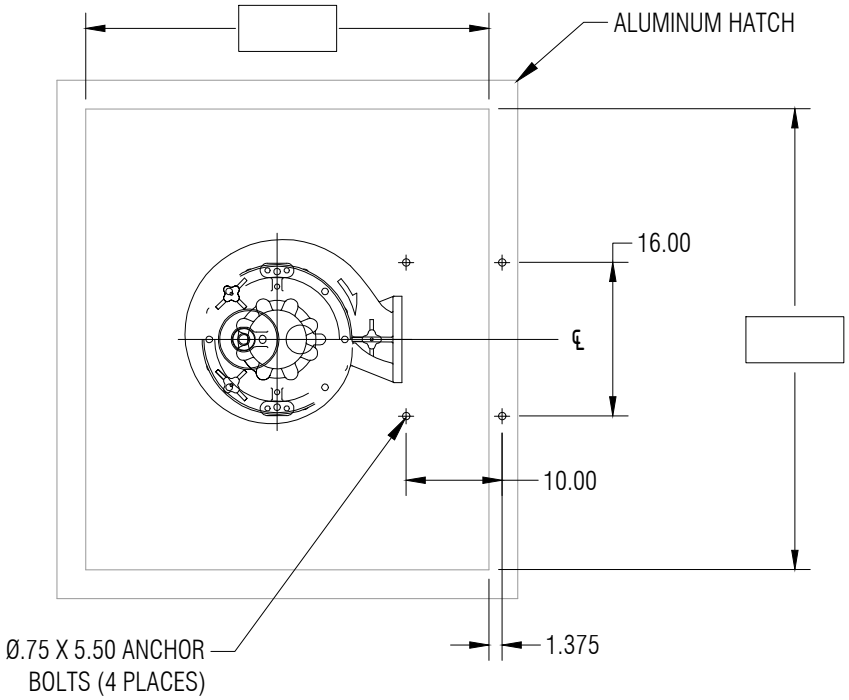

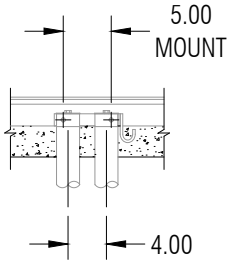

SECTION A-A

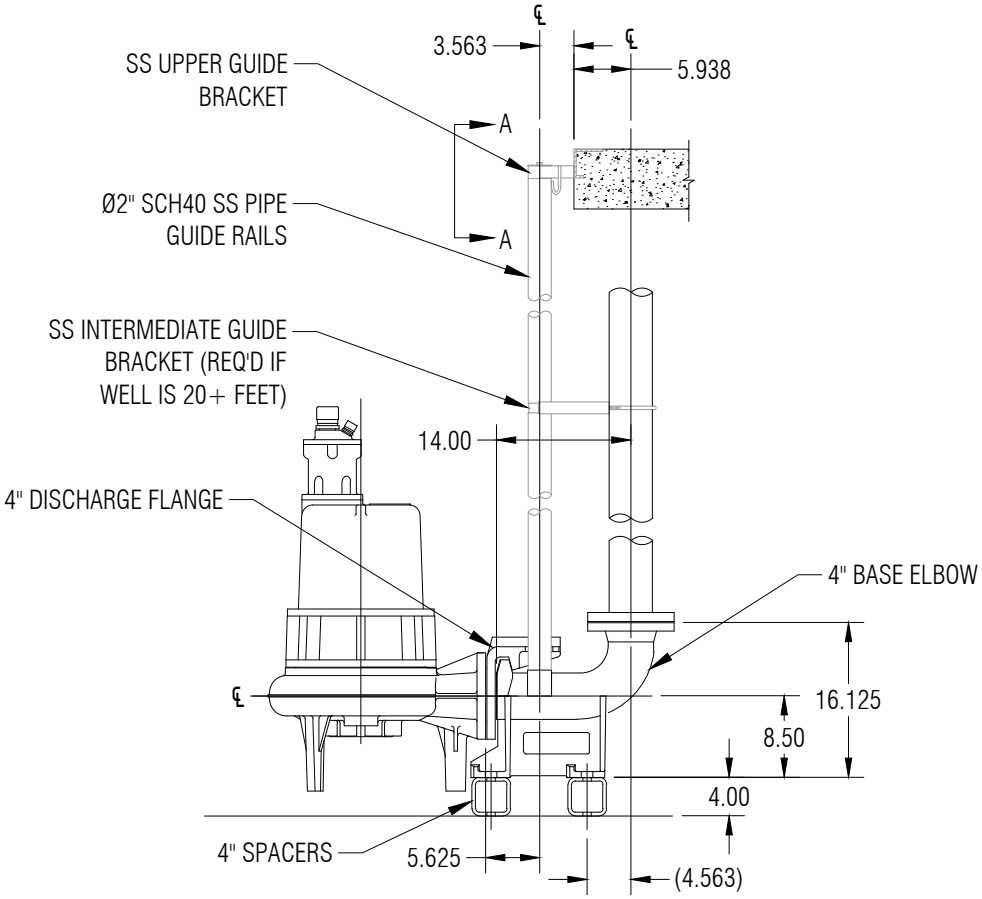

NOTE(S):
1. ALL DIMENSIONS ARE IN INCHES.

REV.	REVISION DESCRIPTION	DATE
△	–	–

DRAWING NOT RELEASED UNTIL APPROVED & DATED

ENGINEER SIGNATURE/DATE:

BARNEY'S PUMPS, INC.
PO BOX 3529, LAKELAND, FL 33802
PHONE: (863) 665-8500 FAX: (863) 666-3858

CUSTOMER: –

ENGINEER: –

JOB NAME: –

SALESPERSON: –

PHASE: SUBMITTAL

DRAWN BY: S. TOWLES

JOB TITLE: 4" SIMPLEX RAIL SYSTEM w/ 4" SPACERS

REV. 0

SCALE: 1:20

DATE: 01/25/2022

JOB No. SO:– PRD:–

DWG. No. A-1087

PAGE: 1 OF 1